MULLER MACHINES SA
top second hand and new precision machine tools

www.mullermachines.ch

SAM 022307 **HUAWIN Tipo PG250**

Gruppo	Rettificatrice per ingranaggi CNC
Produttori	HUAWIN
Tipo	PG250
Controller	HUAWIN (FANUC / SIEMENS optional)

Diametro min. di rettificazione	20 mm
Diametro massimo di rettificazione	250 mm
Diametro min. di testa	20
Numero min. di denti	1
Numero massimo di denti	999
Passo mass. dei denti (modul)	6
Passo min. dei denti (modul)	1
Corse:	
Asse X	170 mm
Asse Y	60 mm
Asse Z	450 mm
Asse C	360 °
Asse A	+/-45 °
Giri massimo	10000 t/min
Potenza motore della mola	17 kW
Potenza installata totale	<20 kVA
Collegamento 50 Hz 3x	400 Volt
Peso della macchina circa	8000 kg
Dimensioni macchina:	
Lunghezza	2600 mm
Larghezza	2370 mm
Altezza	2155 mm

Industriestrasse 22
CH-2555 Brügg BE / Switzerland
T +41 32 373 34 44
sales@mullermachines.ch
CHE-108.090.645 MWST

MULLER MACHINES SA
top second hand and new precision machine tools

www.mullermachines.ch

Workpiece

- Precision profile using rotary dresser.
- Highly rigid box-type bed.
- Equipped with HMI for increasing operational efficiently.
- Linear motor X & Z-axis with zero backlash.
- DD motor of C-axis with zero backlash.

Specification

Workpiece	Spec		
	PG250	PG400	
Min. Gear major diameter	Φ20 mm	Φ30 mm	
Max. Gear outer diameter	Φ250 mm	Φ400 mm	
Max.Module	6	10	
Min.Module	0.5		
Number of teeth	1~999		
Stroke			
X-axis travel	170 mm	250 mm	
Y-axis travel	60 mm	100 mm	
Z-axis travel	450 mm	800 mm	
C-axis	±360°		
A-axis	±45°		
C-axis(DD motor)	500 N.m	1300 N.m	
Center distance	80/1000 mm		
Spindle power	17 kW		
Diameter of Spindle	170G	170G	220G
Outer diameter of grinding wheel	Φ50~Φ220	Φ50~Φ220	Φ210~Φ350
Max. speed of spindle	10000 rpm	10000rpm	4000rpm
Rotary dresser	Φ135 x 16W x R 0.3		
Air pressure source rated flow	30 L/min		
Air Pressure	0.5 Mpa		
Power capacity	< 20 KVA		
Machine dimension（L*W*H）	2600*2370*2155(mm)		
Machine weight	8000 kg		

Specification

Workpiece	Spec		
	PG250	PG400	
Min. Gear major diameter	Φ20 mm	Φ30 mm	
Max. Gear outer diameter	Φ250 mm	Φ400 mm	
Max.Module	6	10	
Min.Module	0.5		
Number of teeth	1~999		
Stroke			
X-axis travel	170 mm	250 mm	
Y-axis travel	60 mm	100 mm	
Z-axis travel	450 mm	800 mm	
C-axis	±360°		
A-axis	±45°		
C-axis(DD motor)	500 N.m	1300 N.m	
Center distance	80/1000 mm		
Spindle power	17 kW		
Diameter of Spindle	170G	170G	220G
Outer diameter of grinding wheel	Φ50~Φ220	Φ50~Φ220	Φ210~Φ350
Max. speed of spindle	10000 rpm	10000rpm	4000rpm
Rotary dresser	Φ135 x 16W x R 0.3		
Air pressure source rated flow	30 L/min		
Air Pressure	0.5 Mpa		
Power capacity	< 20 KVA		
Machine dimension（L*W*H）	2600*2370*2155(mm)		
Machine weight	8000 kg		

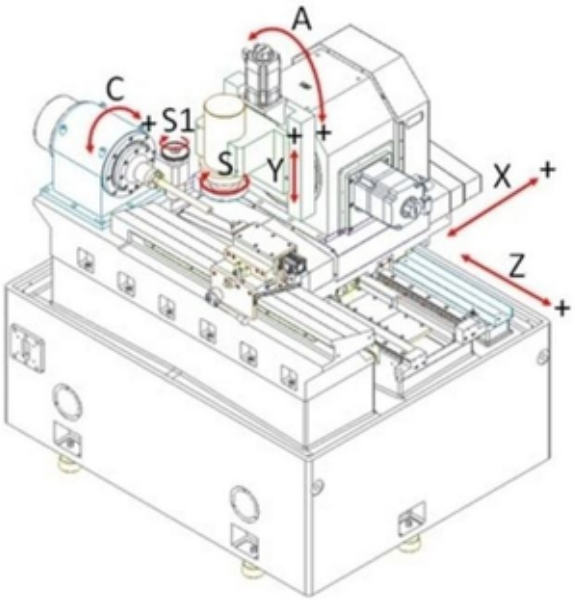

MULLER MACHINES SA
top second hand and new precision machine tools

www.mullermachines.ch

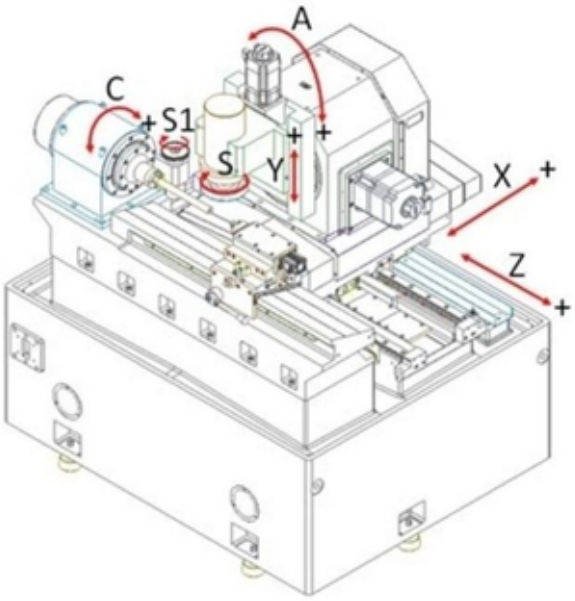

Industriestrasse 22
CH-2555 Brügg BE / Switzerland
T +41 32 373 34 44
sales@mullermachines.ch
CHE-108.090.645 MWST