MULLER MACHINES SA
top second hand and new precision machine tools

www.mullermachines.ch

SAM 022524 **TORNOS Type Micro 8**

Group	CNC automatic lathe / CNC Swiss type lathe
Manufacturer	TORNOS
Type	Micro 8
Controller CNC	GE FANUC Series 32i-Model A
Year	2008

Number of axis total	7
Workpiece length max.	20 mm
Max. bar diameter	10 mm
Inner taper type	W15
Spindle speeds:	
stepless	
from	0 t/min
up to	12000 t/min
Back spindle:	
speeds:	
from	0 t/min
up to	12000 t/min
Inner taper type	F13
Rapid traverse X	20 m/min
Rapid traverse Y	40 m/min
Rapid traverse Z	20 m/min
Voltage 50 Hz 3x	400 Volt
Spindle motor	2.2 / 3.7 kW
Power of back spindle	2.2 / 3.7 kW
Total power required	8 kVA
Machine's weight about	1600 kg
Overall dimensions machine:	
Length	1670 mm
Width	870 mm
Height	1650 mm

Various accessories:

C axis	
Bar feeder	
Manufacturer	LNS
Type	TRYTEX 08
year of manufacture	2009
Part separator	
Coolant system	
Oil mist extractor	Donaldson
Centering microscop	
Set of collets	
Interface serial port RS 232	
High frequency spindle	2X
Status light	

Industriestrasse 22
CH-2555 Brügg BE / Switzerland
T +41 32 373 34 44
sales@mullermachines.ch
CHE-108.090.645 MWST

MULLER MACHINES SA
top second hand and new precision machine tools

www.mullermachines.ch

Industriestrasse 22
CH-2555 Brügg BE / Switzerland
T +41 32 373 34 44
sales@mullermachines.ch
CHE-108.090.645 MWST

MULLER MACHINES SA
top second hand and new precision machine tools

www.mullermachines.ch

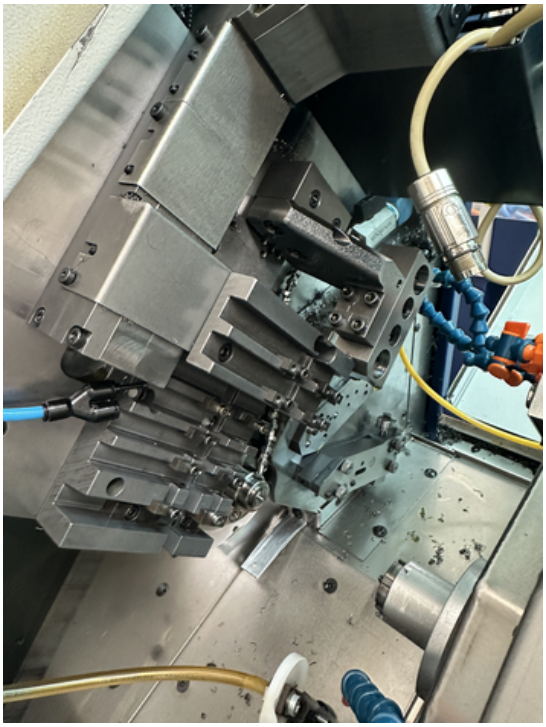

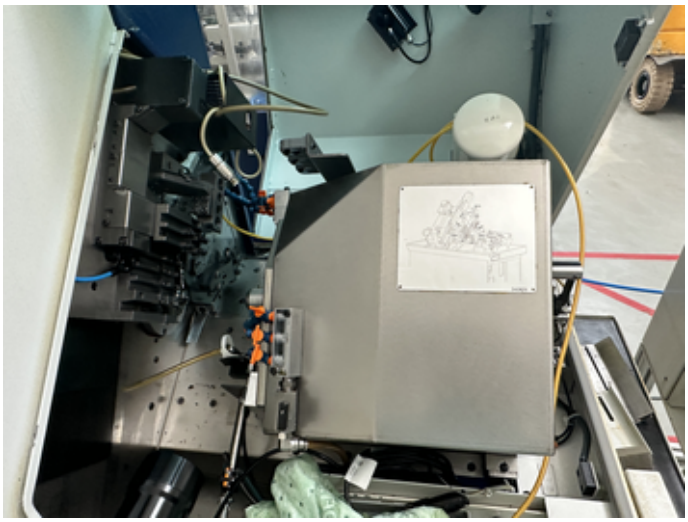

MULLER MACHINES SA
top second hand and new precision machine tools

www.mullermachines.ch

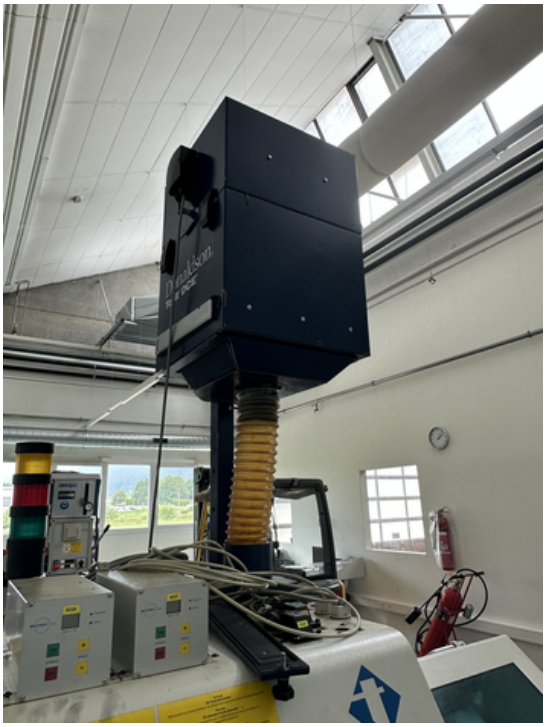

Industriestrasse 22
CH-2555 Brügg BE / Switzerland
T +41 32 373 34 44
sales@mullermachines.ch
CHE-108.090.645 MWST

MULLER MACHINES SA
top second hand and new precision machine tools
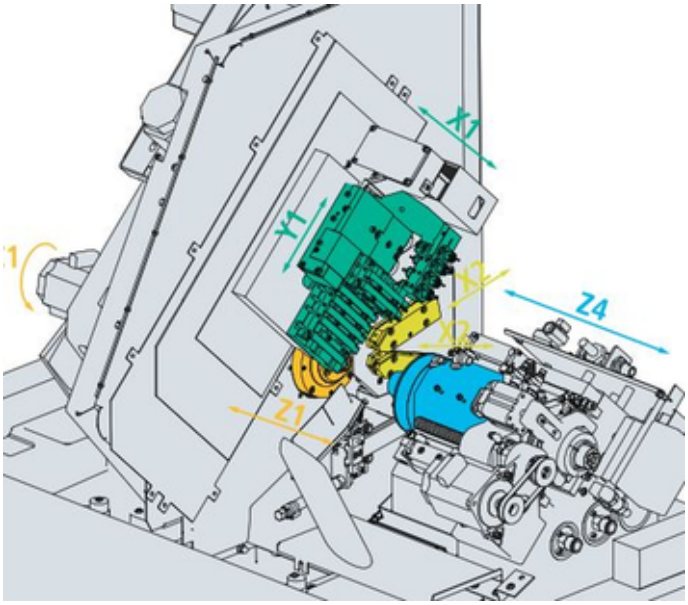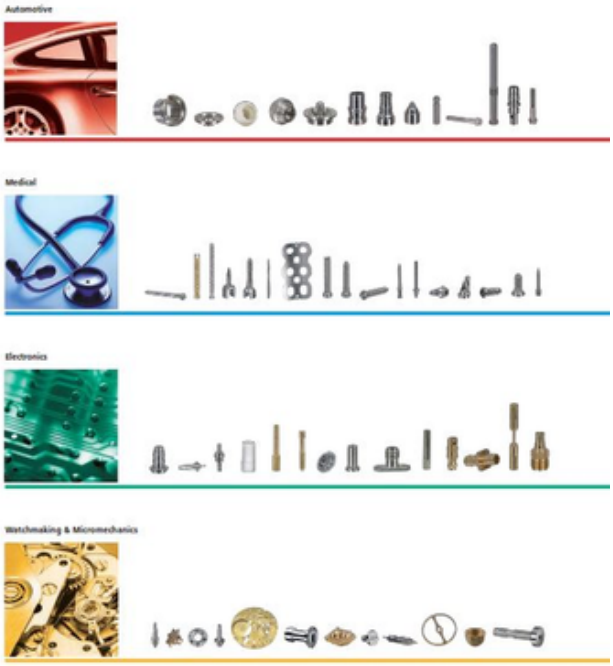
www.mullermachines.ch